THE HYDRO PICOPURE 3

Description

The Picopure 3 faucet integrates with Picosystem® or Picomax® systems to deliver final-stage polishing and ultrapure water at the point of use.

General Information

Series

Pico Series

Applications

Pairs with Picosystem Ultra or Picomax Ultra

Water Quality

Polishes to Ultrapure ASTM Type I / CAP Type I Reagent-Grade water

Dimensions

14.5"L × 8.5"W × 12"H

Distribution

0.5 GPM (1.9 LPM)

Key Features

- Electronically calibrated resistivity monitor
- Electropolished stainless steel spout
- Stainless steel flow control valve
- High-intensity 254 nm UV light
- Ultrafilter capsule removes particulates, microorganisms, and pyrogens

Performance

Resistivity: 18 MΩ·cm @ 25°C
TOC: < 20 ppb
Bacteria: ≤ 5 CFU/mL
Sodium: < 1 ppb (≤ 0.1 CFU/mL with capsule postfilter)
Silica: ≤ 0.05 µm ultrafilter capsule
Hardness: 0 ppb
pH: 6.8–7.0
Flow Rate: **0.5 GPM** (1.9 LPM)

Pairs with the Picosystem Ultra or the Picomax Ultra to dispense ultrapure water

THE PURE CHOICE.
Hydro Service & Supplies Inc.
(919) 544-3744
www.hydroservice.com

Scan for More

THE HYDRO
PICOPURE 3

Flow Diagram

Front

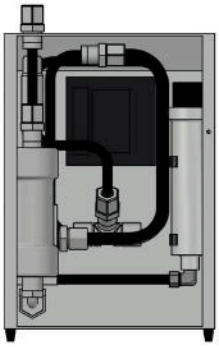

Back Internal

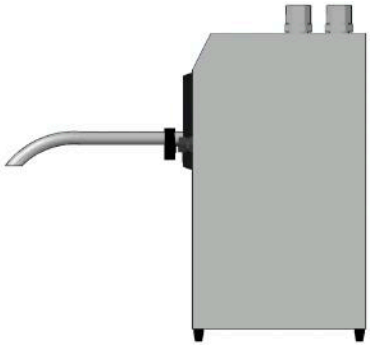

Side

Front Internal

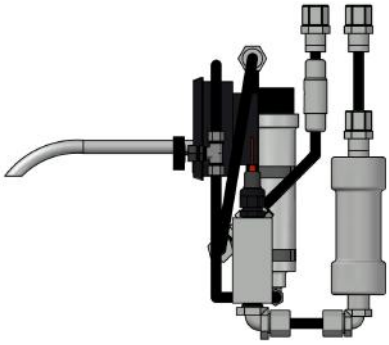

Side Internal