Picosystems®

PICOPURE III FAUCET

The Picopure III® combines UV technology and ultrafiltration to dispense ASTM Type I reagent grade water with endotoxin/pyrogen levels below 0.005 EU/ml. The faucet features an electronically calibrated resistivity monitor, a stainless steel control valve, a high-intensity 254nm UV light, an electropolished and p assivated 316 stainless steel dispensing spout, and an Ultrafilter capsule that p rovides exceptional filtration of p articulates, microorganisms, and pyrogens.

UNIT OPTIONS

PICOPURE III

PICOSYSTEM ULTRA W/ PICOPURE III

PICOMAX ULTRA W/ PICOPURE III

FEATURES

- Electropolished stainless steel spout.
- Stainless steel flow control valve
- 254nm ultraviolet light
- Electronic resistivity monitor

PRODUCT SPECIFICATION

Dimensions: 6.5" L x 5" W x 12" H

Power: 120V / 60Hz

Spout: Electropolished 316 stainless steel

Control valve: Stainless steel

Ultraviolet light: 30,000 mW-sec/cm2 of 254nm

Ultrafilter capsule: 0.05 µm pore size

Resistivity monitor:

PERFORMANCE

Resistivity: 18 megogm-cm (25°C)

Pyrogens/Endotoxins: <0.005 EU/ml

TOC: <5 ppb

Bacteria: 0 CFU/mL (<0.1 CFU/mL with capsule postfilter)

Sodium: <1 ppb

Hardness: <0 ppb

pH: 6.8-7.0

Flow rate: 0.5 gpm (1.9 Lpm)

HYDRO THE PURE CHOICE.

Hydro Service & Supplies Inc.
1-800-950-7426
hydroservice.com

DIMENSIONS

FRONT

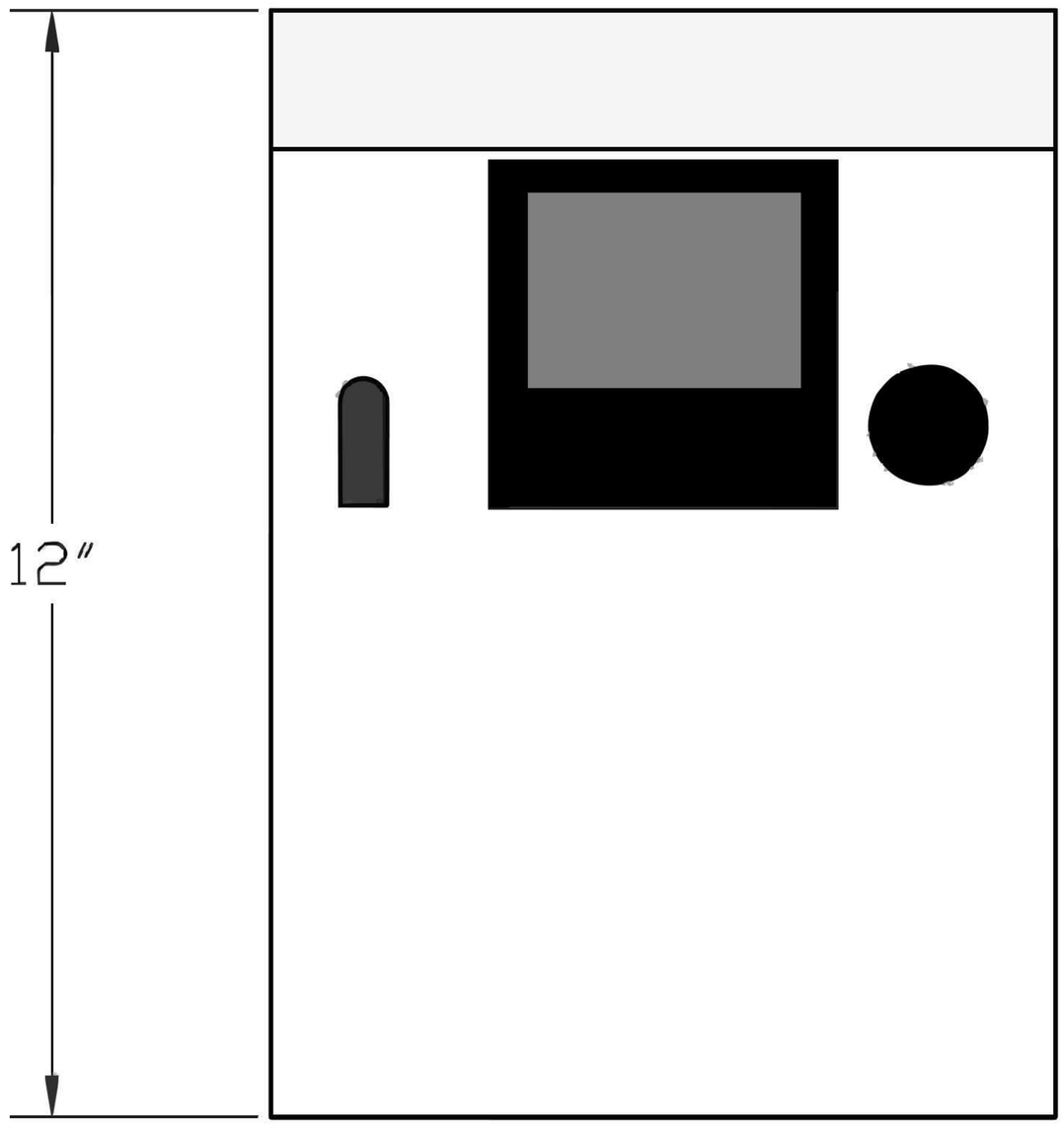
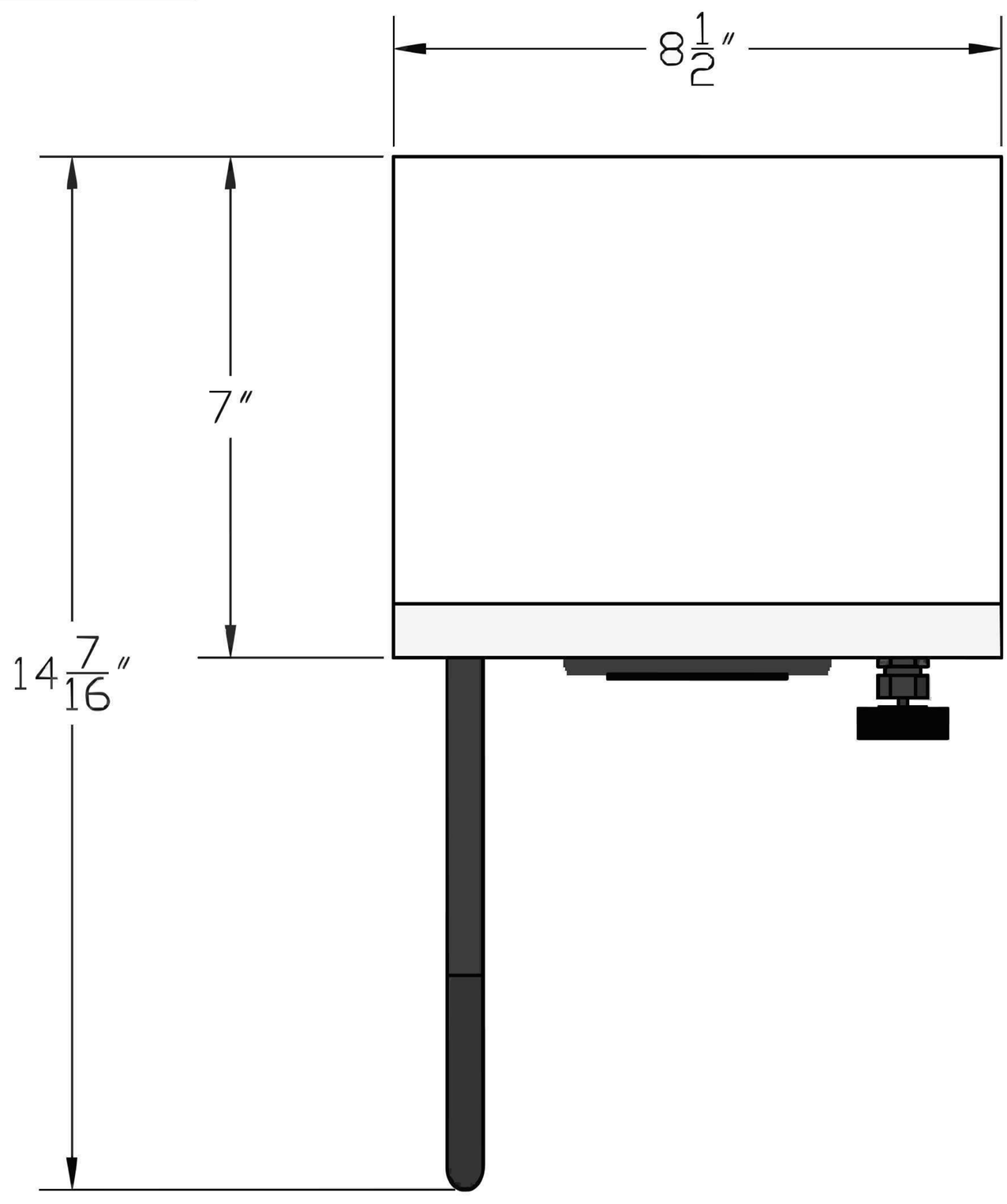
TOP